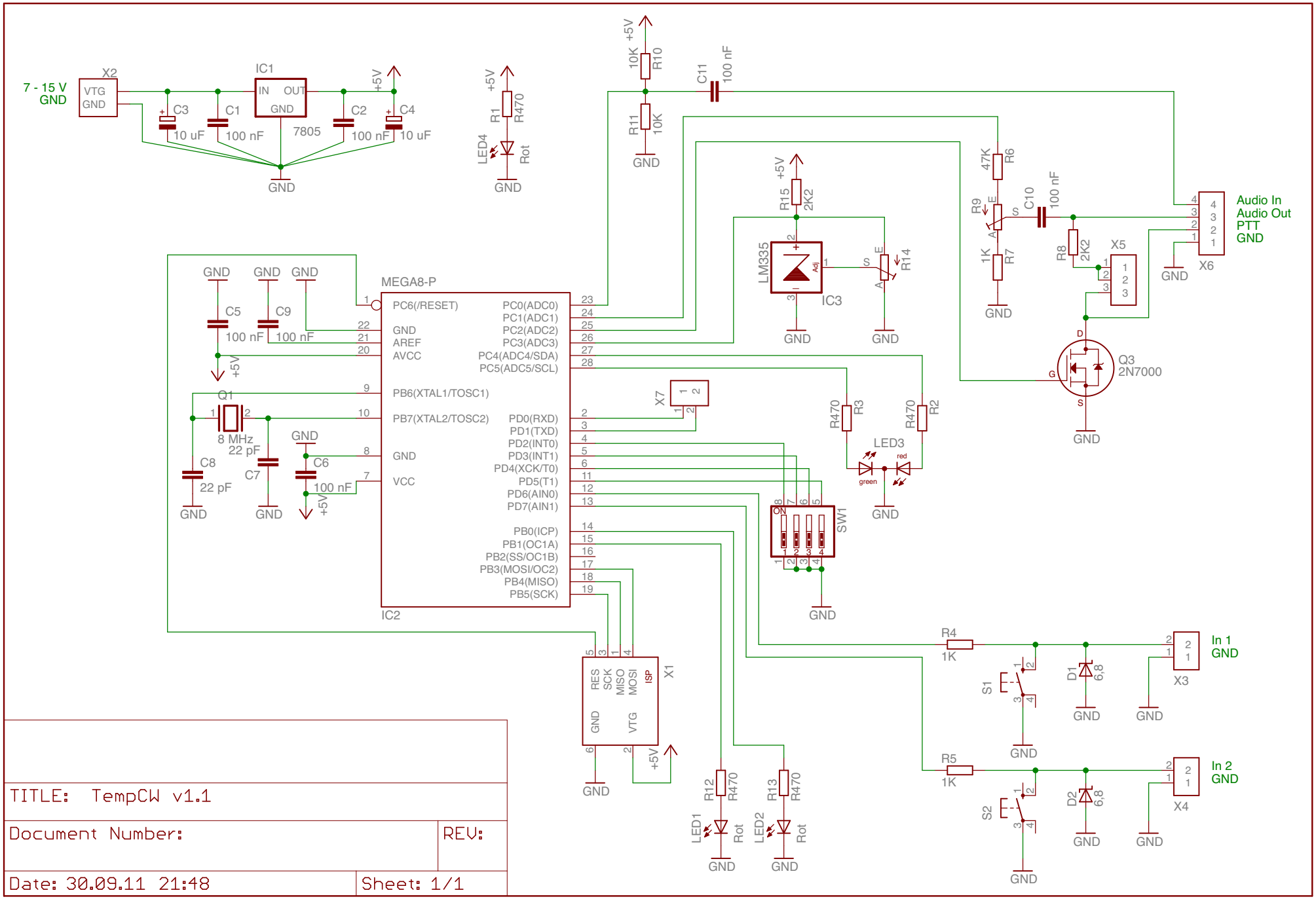

TITLE: TempCW v1.1

Document Number:

REV:

Date: 30.09.11 21:48

Sheet: 1/1